WOODFOLD FOLDING DOOR SOLUTIONS

TRANS-SPACE

MANAGING SPACE WITH OPERABLE WALLS AND DOORS

WOODFOLD SERIES
FOLDING DOORS

Proudly New Zealand owned, managed and made!

WOODFOLD SERIES
FOLDING DOORS

Folding doors are the perfect way to reduce the space taken up by standard solid doors, fill spaces that won't fit standard doors, or simply divide one area from another.

Our well priced Trans-Space Woodfold door makes an ideal divider for doorways and openings that won't fit a swinging door – to conceal your laundry, divide an office, restaurant or church, create a wardrobe or simply maximise the use of a larger space than you need. It can even opens at both ends, (rolling post option) providing easy access to those hard-to-reach places.

Available in Melteca, Melamine, natural timber veneer or your choice of paint. The Woodfold is easy to install using our DIY instruction sheet. With simple, clean lines and two models, to cater to different opening sizes, it's a great choice for homes, schools, clubs and general commercial areas.

Need help choosing?

Woodfold is just one in the Trans-Space folding door range. For help with choosing the right door for your project, just contact us – our technical team will be happy to recommend a model to suit.

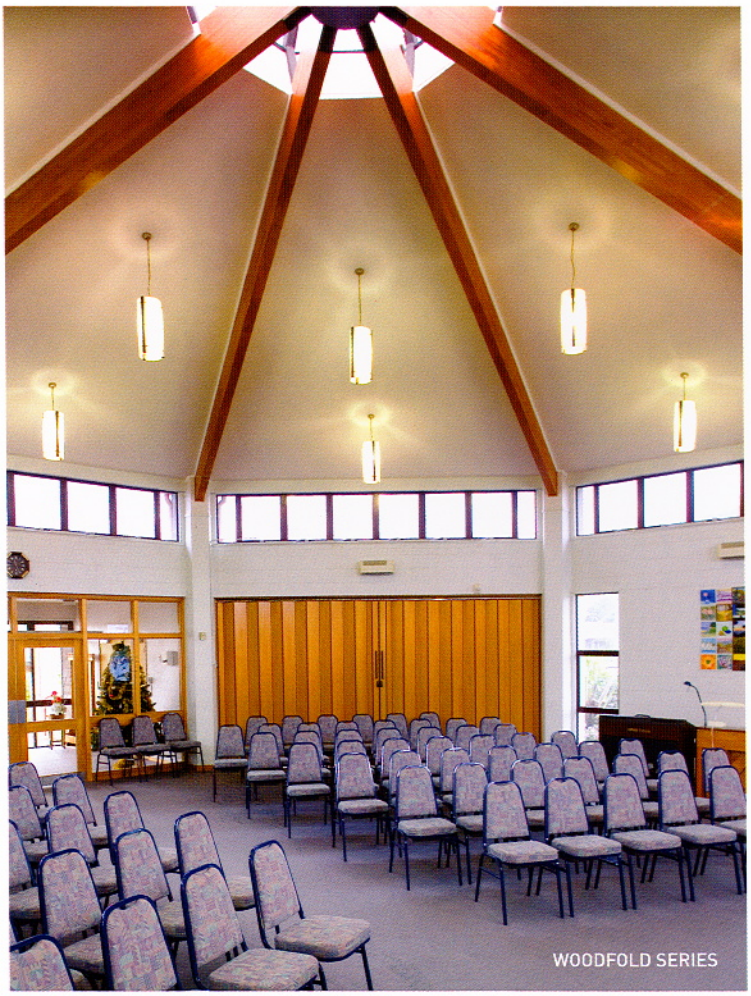

Woodfold series specifications

Finishes
- Pre-finished in synthetic veneer (Melteca, Melamine) or natural timber veneer with two coats of satin polyurethane.
- Spray painted (MDF) to your colour of choice.

Tracks and closing moulds
- Aluminium no8 anodised bronze or powder-coated Arctic White.
- No 12 track (for commercial use) available only in powder-coated Arctic White.
- Use with sub-channel for suspended ceilings.

Trolleys
- 25mm solid nylon wheels.
- 25mm nylon-tyred ball-bearing wheels for doors more than 2460mm high and/or 4500mm wide.

Panels
- 500 – lead panel 19mm x 64mm, intermediate panels 10mm x 129mm, back panel10mm x 52mm.
- 800 – lead panel 19mm x 89mm, intermediate panels 10mm x 195mm, back panel10mm x 52mm.

Hinging
- Flexible vinyl extrusion providing full-height panel links, edge trim and panel face protection.
- Colours: black, white, brown, fawn, cream, grey and coral.

Rolling post
- Lead panel at both ends of the door.
- Door latches and opens on each end.

Intermediate post
- Required for openings more than 6000mm wide, or as specified.
- Same dimension as lead panel to accept foot bolt.

Handles
- Latch with handle and snib each side, although locks and other combinations are also available.

Pendant pulls
- On all doors higher than 2460mm.

Hanging weight
- Approximately 12.25kg/m2.

Fixing
- All necessary track and fixing screws etc supplied.

Work by others
- Timber jambs to be straight and plumb, timber head and floor to be straight and level.

Maximum door sizes: Melteca and Melamine
- 500 – 2460mm high, 4880mm wide (double for pairs).
- 800 – 2460mm high, 7090mm wide (double for pairs).

Maximum door sizes: timber veneer
- 500 – 2440mm high, 4880mm wide (double for pairs).
- 800 – 2720mm high, 7090mm wide (double for pairs).

Stack Dimensions
- 500 – stack depth (S) = 108mm per metre of opening +97mm
- 800 – stack depth (S) = 72mm per metre of opening + 136mm

Installation
- DIY installation instruction sheet and all fixings supplied.

Required Measurements

- Fully detailed measure of opening required on a Trans-Space measure sheet before manufacture can begin.
- Typical opening measurements required:
  - Width at top, middle and bottom.
  - Height at 1m intervals across opening.
  - Required track option.
  - Floor covering detail.
- If stacking is to a pocket, as-built pocket dimensions also required.

Typical elevation and plans

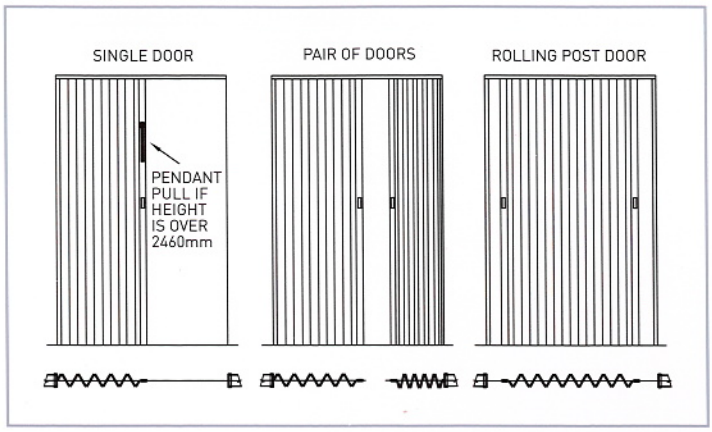

Track options

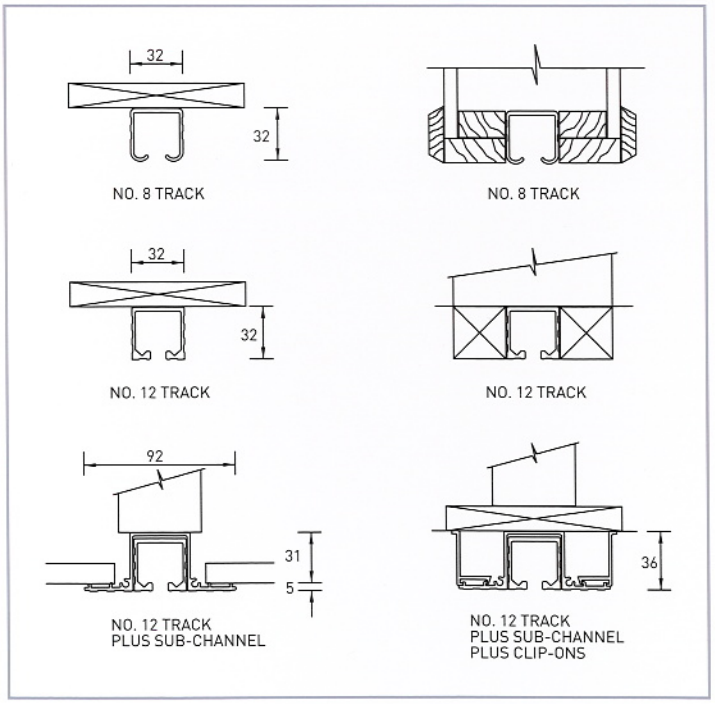

Track dimensions

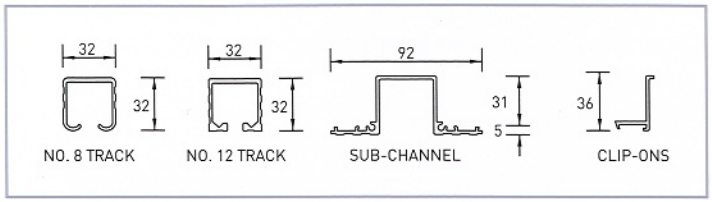

Wall pocket options

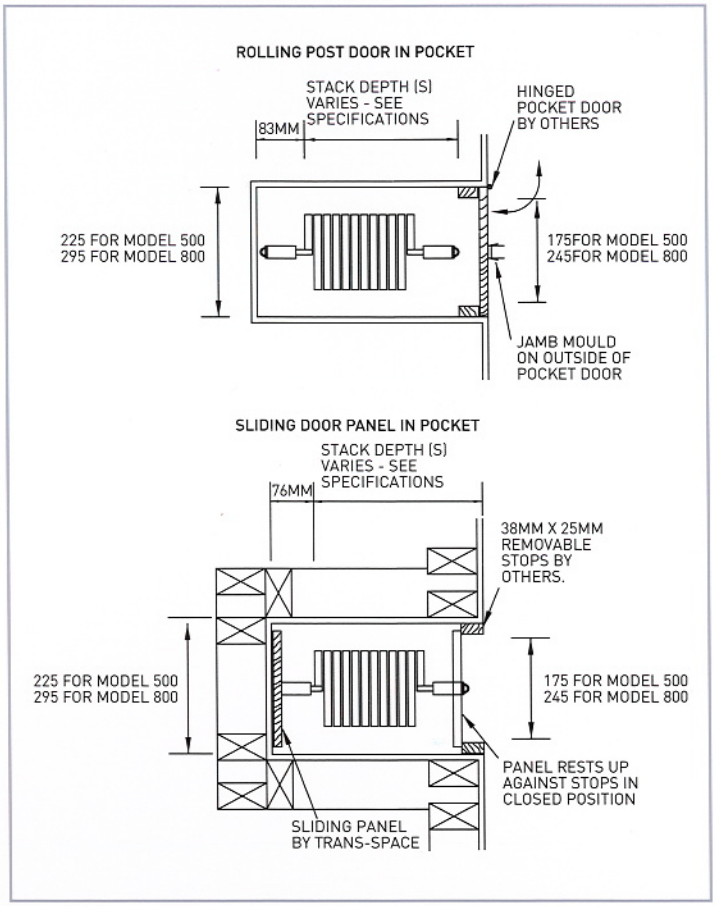

Note

These and other detailed drawings are available as .dwg files and can be downloaded from www.trans-space.co.nz. If your requirements are not represented by any of the drawings here, please contact one of our technical experts on 09 274 4089.

If you're looking for the best in folding door solutions, you've come to the right place. Offering a record of more than 60 years' performance in New Zealand, the Trans-Space team has the knowledge, the experience and the expertise to match your requirements to the finest detail.

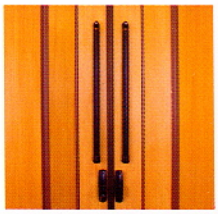

Tailored products...

Proudly Kiwi owned and operated, Trans-Space designs, builds and installs moveable walls and folding doors for every purpose – for businesses, homes, retail stores, schools, hotels, leisure facilities, conference venues, hospitals, rest homes... you name it, we've probably done it.

Every folding door is tailor-made for its location, its purpose and its users – and it's designed to last, with top-quality fittings, finishes and other raw materials sourced right here in New Zealand.

World-class standards...

You can rely on Trans-Space for quality. Accredited to ISO 9001:2000, we operate stringent quality control systems to ensure world-class products at competitive prices. Every wall and door we produce has a 12-month warranty.

We're also committed to innovation, with a product development programme focused on exploring new ideas, creating new solutions and delivering better performance in every product we make.

Service excellence...

Trans-Space has a reputation for service excellence. We'll work the way you want to work – with personal visits, in-depth product knowledge and on-site technical expertise and advice. Wherever your project and whatever your specifications, we'll be delighted to help.

Just talk to us

For more information on Trans-Space and our products:

- click on www.trans-space.co.nz
- phone us on 09 274 4089
- send an email to info@trans-space.co.nz
- fax us on 09 274 7058
- visit us at 12 Lovegrove Crescent, Otara, Auckland
- write to us at PO Box 58070, Greenmount, Manukau 2141.

We look forward to hearing from you!

walls that work

TRANS-SPACE

MANAGING SPACE WITH OPERABLE WALLS AND DOORS

T: +64 9 274 4089
F: +64 9 274 7058
E: info@trans-space.co.nz
W: www.trans-space.co.nz

12 Lovegrove Crescent, Otara
PO Box 58-070, Greenmount
Manukau 2141, Auckland
New Zealand

Proudly New Zealand owned, managed and made!

ISO 9001: 2000 CERTIFIED